LONG SEAMS		
COURSE	ORIENTATION	ORIENTATION
1	0°	245°
2	4°	249°
3	0°	245°
4	4°	249°

*VERT – TOP TO BOTTOM

SKIRT LONG SEAMS		
COURSE	ORIENTATION	ORIENTATION
1	175°	330°

*NOTE: ALL ELEVATIONS ARE PULLED FROM WELD SEAM FOR EASE OF FABRICATION

*NOTE: BASE RING, GUSSETS AND BOTTOM 8" OF THE SKIRT TO BE BLASTED, TAPED & NOT PAINTED

Ship loose items:
(2 pcs.) Handrails W/ Hardware
(3 sets) Spare gaskets for M, N
(1 set) Spare gaskets for F, G1, G2 H, Q, T1, T2.
(2 PCS) BASE RING
(32 PCS) BASE RING GUSSETS

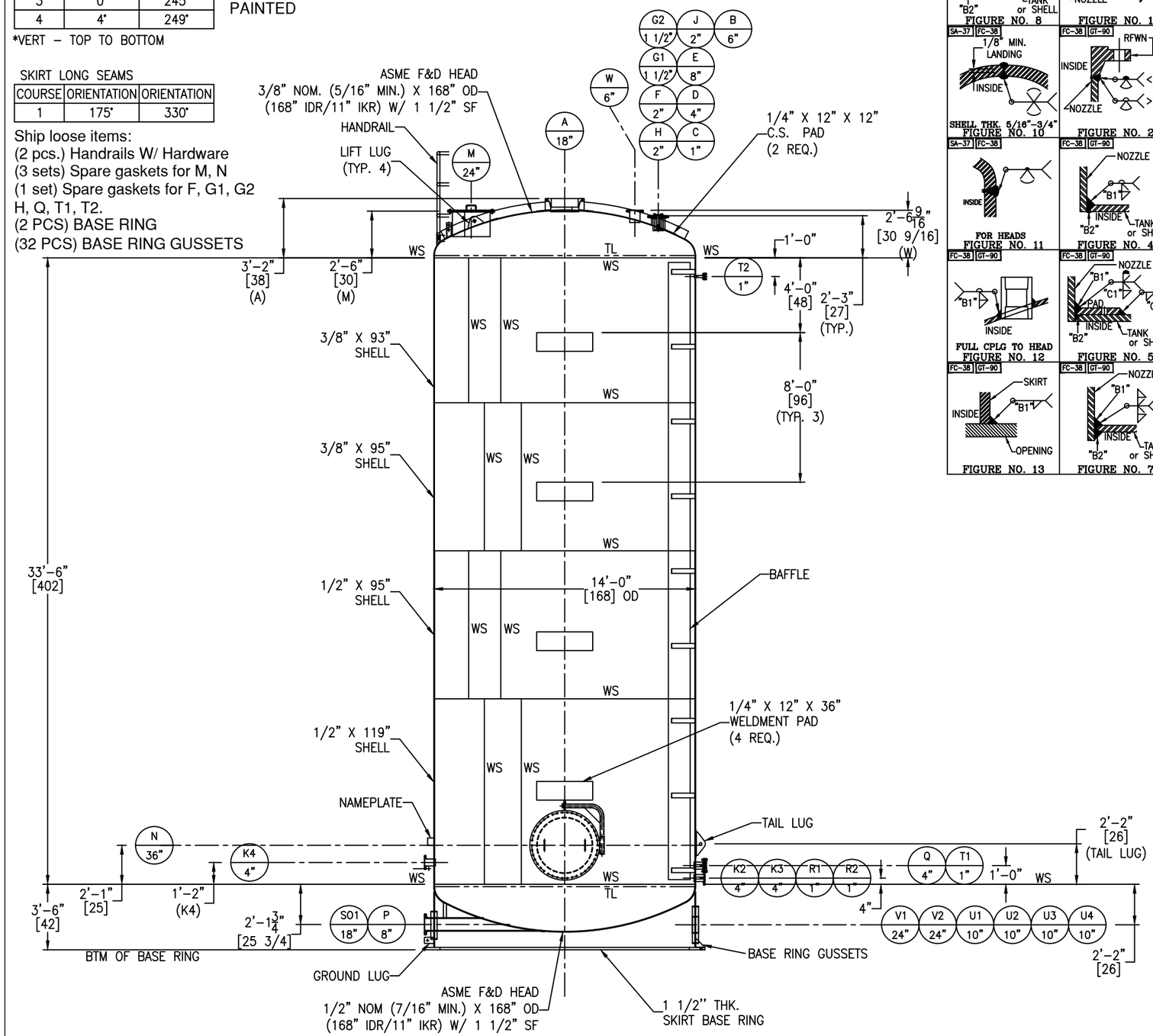

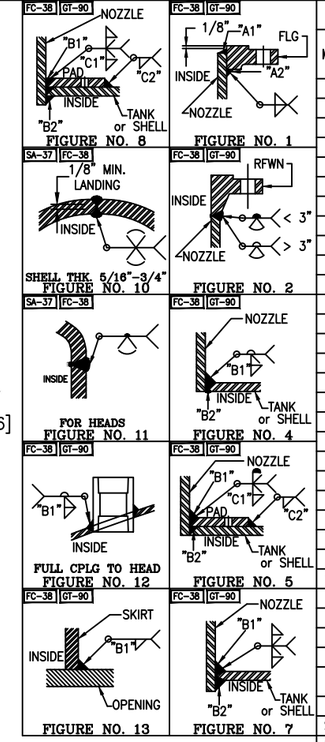

NOZZLE SCHEDULE

MARK	SERVICE	SIZE	RATING	TYPE / STYLE	NECK SCHED.	PROJECTION EXT. (E)	PROJECTION INT. (MIN.)	WELD FIGURE	REPAD SIZE (WIDTH X THK.)	WELD SIZE "A1"	"A2"	"B1"	"B2"	"C1"	"C2"
A	AGITATOR	18"	150#	RFWN	3/8"	SEE DWG	1/2"	2,8	9" X 1/4"	–	–	5/16	1/8	1/4	1/4
B	LEVEL TRANSMITTER	6"	150#	RFSO	40S	SEE DWG	1/2"	1,7	–	5/16	5/16	5/16	1/8	–	–
C	HIGH LEVEL SWITCH	1"	3000#	FULL THRD CPLG	–	SEE DWG	–	12	–	–	–	3/16	–	–	–
D	EQUALIZATION LINE	4"	150#	RFSO	80S	SEE DWG	1/2"	1,7	–	3/8	3/8	5/16	1/8	–	–
E	EMERGENCY VENT	8"	150#	RFSO	80S	SEE DWG	–	1,4	–	3/8	1/2	3/8	1/8	–	–
F	SPARE	2"	150#	RFSO W/ BLIND	160	SEE DWG	1/2"	1,7	–	3/8	5/16	5/16	1/8	–	–
G1	SPARE	1 1/2"	150#	RFSO W/ BLIND	160	SEE DWG	1/2"	1,7	–	5/16	5/16	1/4	1/8	–	–
G2	SPARE	1 1/2"	150#	RFSO W/ BLIND	160	SEE DWG	1/2"	1,7	–	5/16	5/16	1/4	1/8	–	–
H	SPARE	2"	150#	RFSO W/ BLIND	160	SEE DWG	1/2"	1,7	–	3/8	5/16	5/16	1/8	–	–
J	VENT	2"	150#	RFSO	160	SEE DWG	–	1,4	–	3/8	5/16	5/16	1/8	–	–
K2	LIQUID IN/OUT	4"	150#	RFSO	80S	6"	1/2"	1,7	–	3/8	3/8	5/16	1/8	–	–
K3	LIQUID IN/OUT	4"	150#	RFSO	80S	6"	1/2"	1,7	–	3/8	3/8	5/16	1/8	–	–
K4	LIQUID IN/OUT	4"	150#	RFSO	80S	6"	1/2"	1,7	–	3/8	3/8	5/16	1/8	–	–
M	ROOF MANWAY	24"	–	API W/HANDLE	3/8"	SEE DWG	1/2"	8	5" X 1/4"	–	–	7/16	1/8	1/2	1/4
N	SHELL MANWAY	36"	–	API W/DAVIT	3/8"	6"	1/2"	7	–	–	–	5/16	1/8	–	–
P	LIQUID OUTLET	8"	150#	RFSO	80S	SEE DWG	–	1,5	3" X 1/4"	3/8	1/2	3/8	1/8	1/4	1/4
Q	SPARE	4"	150#	RFSO W/ BLIND	80S	6"	1/2"	1,7	–	3/8	3/8	5/16	3/8	–	–
R1	SAMPLE	1"	150#	RFSO	160	6"	1/2"	1,7	–	1/4	5/16	3/16	1/8	–	–
R2	SAMPLE	1"	150#	RFSO	160	6"	1/2"	1,7	–	1/4	5/16	3/16	1/8	–	–
T1	SPARE	1"	150#	RFSO W/ BLIND	160	6"	1/2"	1,7	–	1/4	5/16	3/16	1/8	–	–
T2	SPARE	1"	150#	RFSO W/ BLIND	160	6"	1/2"	1,7	–	1/4	5/16	3/16	1/8	–	–
U1	SKIRT INSPECTION	10"	–	–	40S	1 7/8"	SEE DWG	13	–	–	–	1/4	–	–	–
U2	SKIRT INSPECTION	10"	–	–	40S	1 7/8"	SEE DWG	13	–	–	–	1/4	–	–	–
U3	SKIRT INSPECTION	10"	–	–	40S	1 7/8"	SEE DWG	13	–	–	–	1/4	–	–	–
U4	SKIRT INSPECTION	10"	–	–	40S	1 7/8"	SEE DWG	13	–	–	–	1/4	–	–	–
SO1	SKIRT OPENING FOR P	18"	–	–	3/8"	1 7/8"	SEE DWG	13	–	–	–	1/4	–	–	–
V1	SKIRT ACCESS	24"	–	–	1/2"	1 7/8"	SEE DWG	13	–	–	–	1/4	–	–	–
V2	SKIRT ACCESS	24"	–	–	1/2"	1 7/8"	SEE DWG	13	–	–	–	1/4	–	–	–
W	ROOF PORT	6"	150#	RFSO	40S	SEE DWG	1/2"	1,7	–	5/16	5/16	1/4	1/8	–	–

MATERIALS OF CONSTRUCTION

	VESSEL
SHELL	SA516-70
HEADS	SA516-70
RIM ANGLE	–
NOZZLE NECKS	SA106-B SMLS & SA516-70
NOZZLE FLANGES	SA105
MANWAY NECKS	SA516-70
MANWAY FLANGES	SA36
GASKETS	GARLOCK 3000
BOLTS/STUDS	SA193-B7 (ZINC PLATED)
NUTS	SA194-2H (ZINC PLATED)
REPADS & WELDMENT PADS	SA36
COUPLINGS	SA105
SUPPORTS/HOLD DOWNS	SA36
LIFTING LUGS	SA36
SKIRT OPENING	SA36 & SA53B-ERW
INSULATION RINGS	–
GROUND LUG	SA36
BAFFLE	SA516-70
BAFFLE SUPPORTS	SA516-70
LADDER	–
TANK CLIPS (LADDER)	–
HANDRAIL	SA500
HANDRAIL CLIPS	SA36
PLATFORM	–
PLATFORM CLIPS	–
JACKET SHELL	–
JACKET HEADS	–
JACKET NOZZLE NECKS	–
JACKET NOZZLE FLANGES	–

DESIGN DATA

	VESSEL
DESIGN AND FAB. CODE	ASME SECT. VIII DIV. 1
CERT. STAMP REQ'D.	NO
DESIGN PRESSURE	14 PSIG/ -6" WC (0.22 PSIG)
DESIGN TEMPERATURE	250° F
MIN. DESIGN METAL TEMP.	-20° F @ 14 PSIG
OPERATING PRESSURE	10 PSIG
OPERATING TEMPERATURE	0°F -160° F
JOINT EFFICIENCY HEADS	0.85
JOINT EFFICIENCY SHELL	0.85
CORROSION ALLOWANCE	1/16"
SPECIFIC GRAVITY	1.4
EARTHQUAKE ZONE	Ss = (0.830) S1 = (0.249)
WIND LOAD	105 MPH
STRESS RELIEF	NOT REQ'D
RADIOGRAPHIC EXAM	SPOT (SEE NOTE 6)
DYE PENETRANT EXAM	NOT REQ'D
MAGNETIC PARTICLE EXAM	NOT REQ'D
HYDROSTATIC TEST	NOT REQ'D
PNEUMATIC TEST	16 PSIG / GAUGE #11
JKT DESIGN AND FAB. CODE	–
JKT CERT. STAMP REQ'D.	–
JKT DESIGN PRESSURE	–
JKT DESIGN TEMPERATURE	–
JKT MIN. DESIGN METAL TEMP.	–
JKT OPERATING PRESSURE	–
JKT OPERATING TEMPERATURE	–
JKT JOINT EFFICIENCY HEADS	–
JKT JOINT EFFICIENCY SHELL	–
JKT HYDRO TEST	–

VESSEL FINISH

INTERIOR WELD TREATMENT:	SAV TANK STANDARD
EXTERIOR WELD TREATMENT:	SAV TANK STANDARD
SAV TANK FINISHING STANDARD:	N/A
INSULATION:	N/A
PAINTING:	SEE NOTE 7

VESSEL CAPACITY AND WEIGHTS

OPERATING CAPACITY	–
FULL CAPACITY	41,800 GAL.
EMPTY SHIPPING WEIGHT WITHOUT ACCESSORIES	46,400 LBS.
WEIGHT FULL OF WATER	395,800 LBS.
WEIGHT FULL OF PRODUCT	535,400 LBS.
WEIGHT OF ACCESSORIES	560 LBS.

ASME SECT. VIII, DIV. 1
2023 EDITION

ENG. _____ DATE: _____
Q.C. _____ DATE: _____
A.I. _____ DATE: _____

This drawing is issued for customer approval. please review, make approval changes (if any) in red. check the appropriate box, sign & date.

- ☐ Approval – no changes. Please proceed with fabrication.
- ☐ Approved as noted. Please proceed with fabrication
- ☐ Not approved. Please make changes and resubmit.

Customer signature _____ Date _____

GENERAL NOTES

1.) COVER ALL FLANGES, OPENINGS & MACHINED SURFACES PRIOR TO SHIPMENT UNLESS OTHERWISE NOTED.
2.) BOLT HOLES TO STRADDLE 0° & 180° UNLESS OTHERWISE NOTED.
3.) REPADS TO HAVE (1) ø1/4" NPT TELL-TALE HOLES FOR PNEUMATIC TESTING AT 2 PSIG FOR PRESSURE RETAINING PARTS. ALL OTHER REPADS TO HAVE (1) ø1/4" WEEP HOLE AT LOWEST POINT ON PAD.
4.) ASME CODE VESSELS TO BE IN ACCORDANCE WITH UG-80 & UG-81. TOLERANCES: +/- 1/8" FOR DIMENSIONS AND +/- 2 DEGREES FOR ORIENTATIONS.
5.) ASME MATERIALS TO CONFORM TO THE FOLLOWING: FLANGES – B16.5, FITTINGS – B16.9 & COUPLINGS – B16.11.
6.) RADIOGRAPHY – SPOT X-RAY IN ACCORDANCE WITH ASME SECT. VIII DIV. 1.
7.) PAINTING – SAND BLAST TO SP6. (1) COAT (3-4 MILS) SW MACROPOXY 646, (1) COAT (2-3 MILS) SW ACROLON 218 WHITE.
HANDRAILS: SAND BLAST TO SP6. (1) COAT (3-4 MILS) SW MACROPOXY 646, (1) COAT (2-3 MILS) SW ACROLON 218 SAFETY YELLOW.

REVISIONS

REV	D.BY	C.BY	DATE	DESCRIPTION
				AS BUILT
2	AD	–	10/28/24	CERTIFIED
1	AD	RS	10/17/24	APPROVAL REV 1
0	AD	RS	9/10/24	APPROVAL

Savannah Tank & Equipment Corp.
1517 Telfair Road, Savannah, GA 31415
(912) 233-8902

DRAWN BY: AD
CHK'D BY: RS
APPROVED BY: NP
SCALE: 1/4" = 1'-0"

GEOCYCLE LLC
40K GALLON TANK #3
EQUIP. #
CUST. PO #4501905971

DRAWING NO.: 053-24-1 | SHT 1 OF 8 | REV. SET 2

LONG SEAMS

COURSE	ORIENTATION	ORIENTATION
1	0°	245°
2	4°	249°
3	0°	245°
4	4°	249°

*VERT – TOP TO BOTTOM

SKIRT LONG SEAMS

COURSE	ORIENTATION	ORIENTATION
1	175°	330°

Ship loose items:
(2 pcs.) Handrails W/ Hardware
(3 sets) Spare gaskets for M, N
(1 set) Spare gaskets for F, G1, G2
H, Q, T1, T2.
(2 PCS) BASE RING
(32 PCS) BASE RING GUSSETS

*NOTE: BASE RING, GUSSETS AND BOTTOM 8" OF THE SKIRT TO BE BLASTED, TAPED & NOT PAINTED

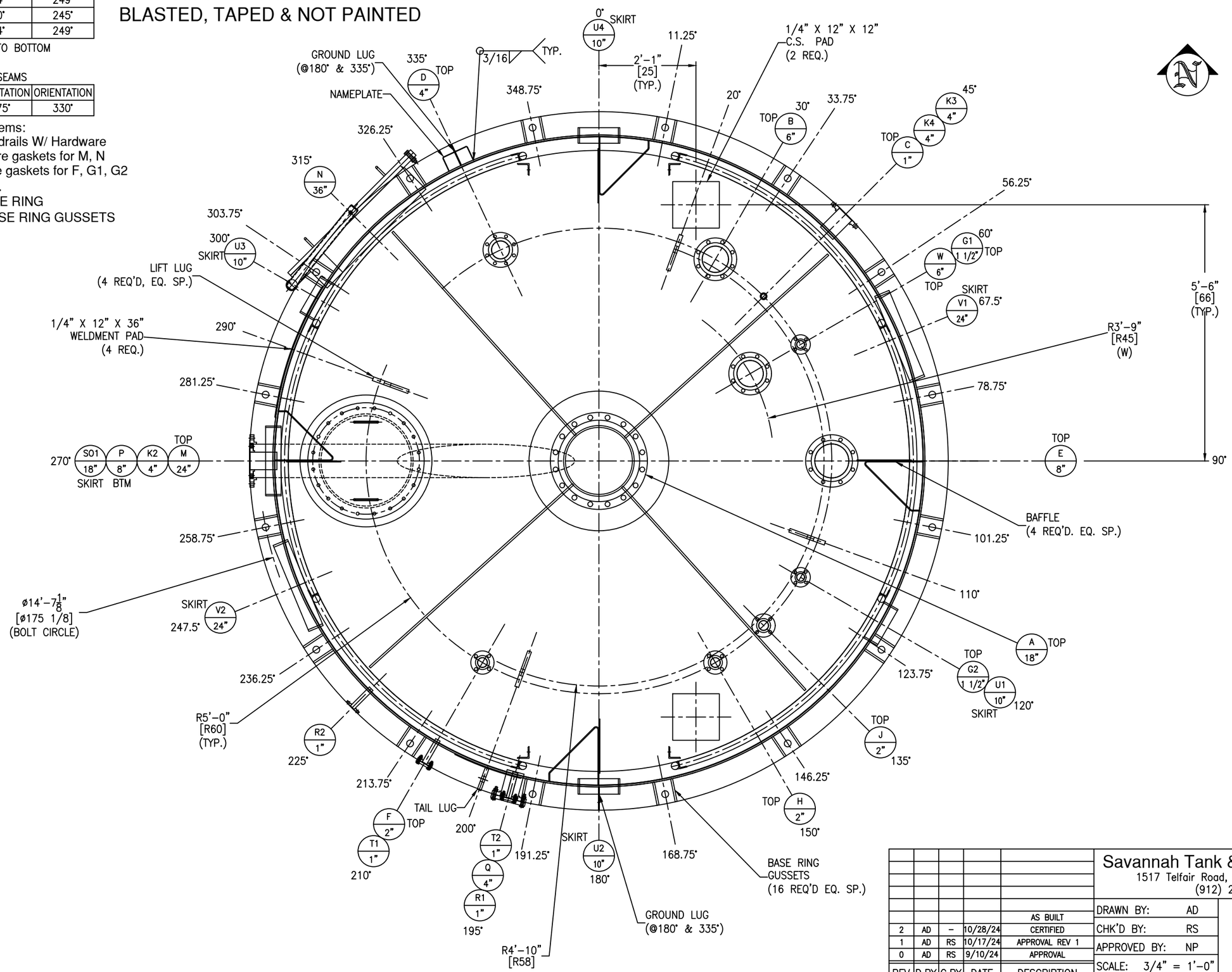

REV	D.BY	C.BY	DATE	DESCRIPTION
				AS BUILT
2	AD	–	10/28/24	CERTIFIED
1	AD	RS	10/17/24	APPROVAL REV 1
0	AD	RS	9/10/24	APPROVAL

1 REVISIONS

Savannah Tank & Equipment Corp.
1517 Telfair Road, Savannah, GA 31415
(912) 233-8902

DRAWN BY: AD
CHK'D BY: RS
APPROVED BY: NP
SCALE: 3/4" = 1'-0"

GEOCYCLE LLC
40K GALLON TANK #3
EQUIP. #
CUST. PO #4501905971

DRAWING NO.: 053-24-2 SHT 2 OF 8 REV. SET 2

FC-38

SKIRT LONG SEAMS

COURSE	ORIENTATION	ORIENTATION
1	175°	330°

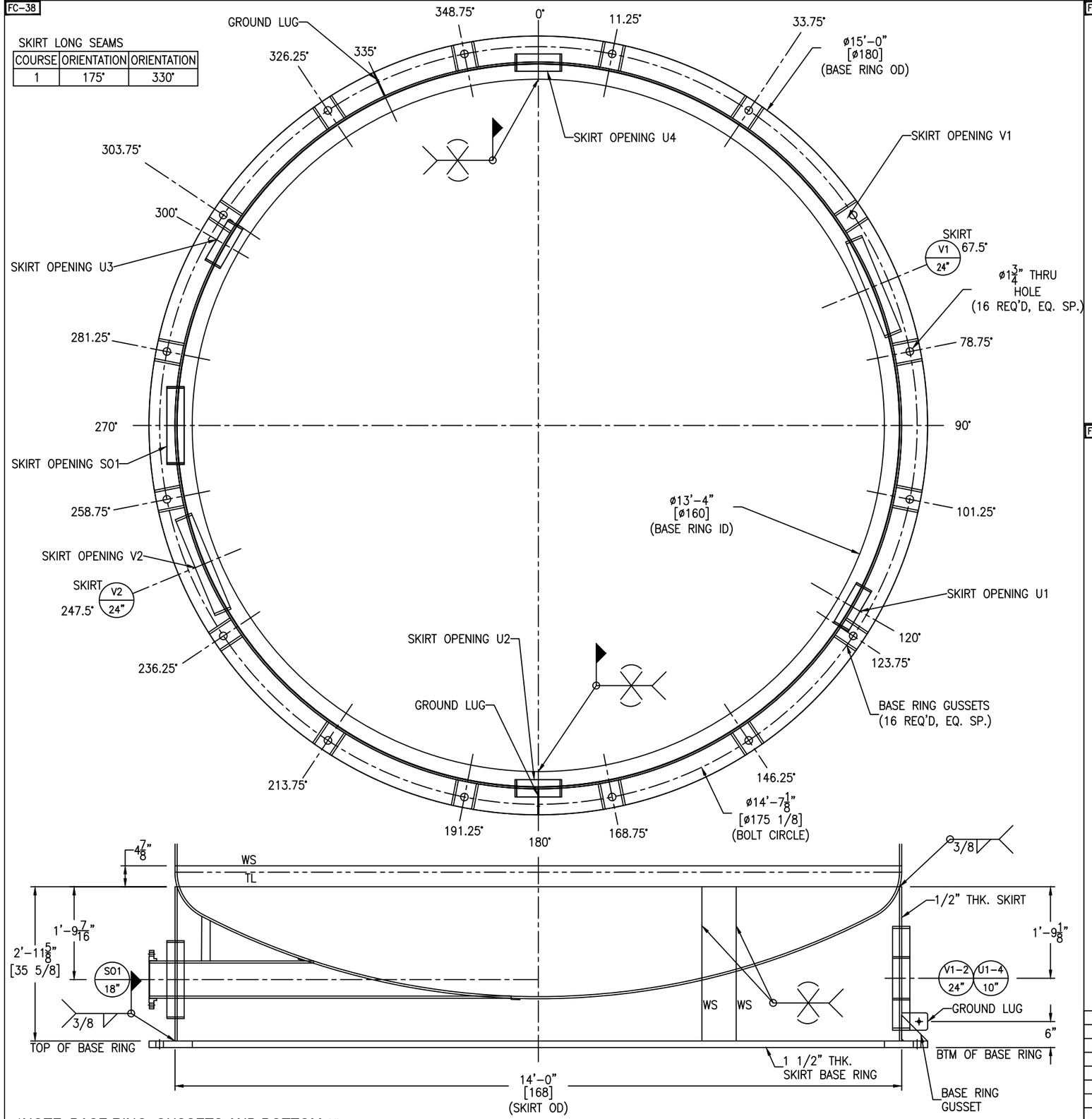

*NOTE: BASE RING, GUSSETS AND BOTTOM 8" OF THE SKIRT TO BE BLASTED, TAPED & NOT PAINTED

SKIRT DETAIL

SCALE: 3/4" = 1'-0"

BASE RING AND GUSSETS TO BE SHIPPED LOOSE

FC-38

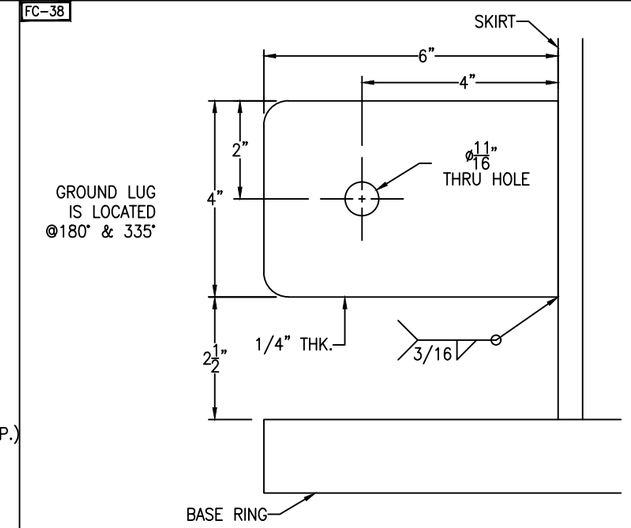

GROUND LUG DETAIL

(2 REQ'D) SCALE: 6" = 1'-0"

FC-38

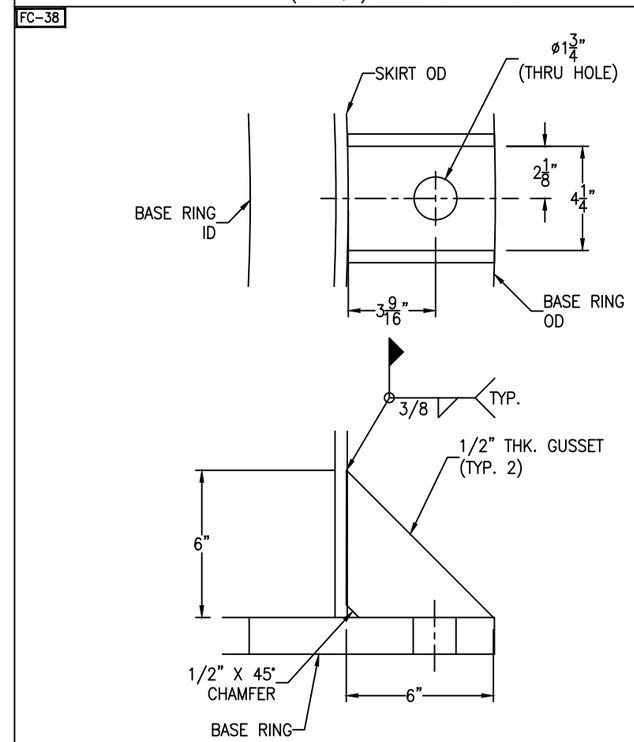

BASE RING GUSSET DETAIL

(16 REQ'D) SCALE: 3" = 1'-0"

REV	D.BY	C.BY	DATE	DESCRIPTION
				AS BUILT
2	AD	–	10/28/24	CERTIFIED
1	AD	RS	10/17/24	APPROVAL REV 1
0	AD	RS	9/10/24	APPROVAL

1 REVISIONS

Savannah Tank & Equipment Corp.
1517 Telfair Road, Savannah, GA 31415
(912) 233-8902

DRAWN BY: AD
CHK'D BY: RS
APPROVED BY: NP
SCALE: 1/4" = 1'-0"

GEOCYCLE LLC
40K GALLON TANK #3
EQUIP. #
CUST. PO #4501905971

DRAWING NO.: 053-24-3 SHT 3 OF 8 REV. SET 2

FC-38

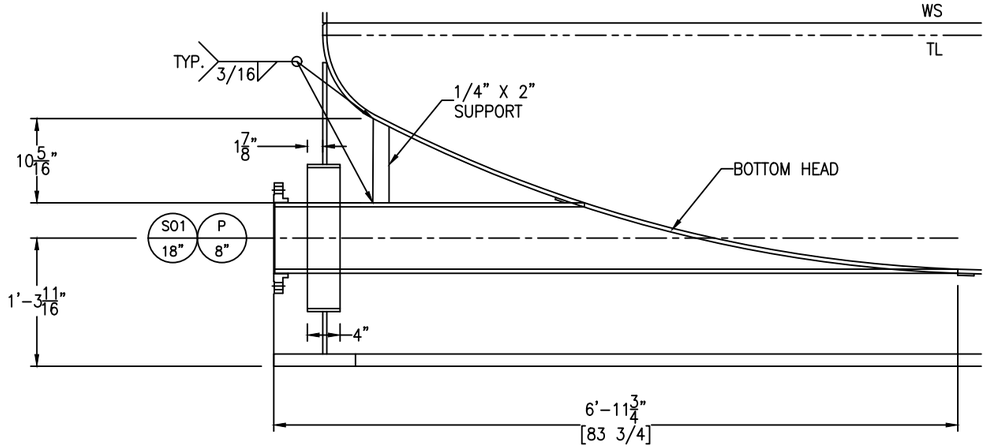

NOZZLE P & SKIRT OPENING S01 DETAIL

SCALE: 1" = 1'-0"

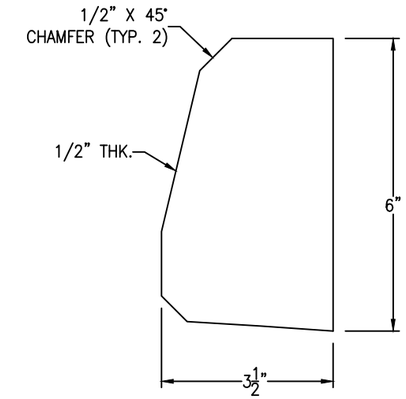

NOZZLE A GUSSET DETAIL

(4 REQ'D) SCALE: 6" = 1'-0"

FC-38

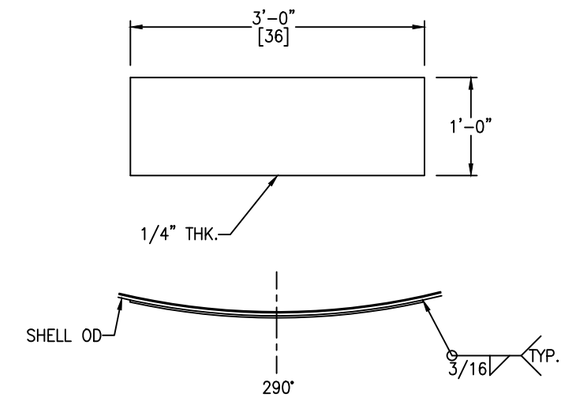

WELDMENT PAD DETAIL

(4 REQ'D) SCALE: 1" = 1'-0"

FC-38

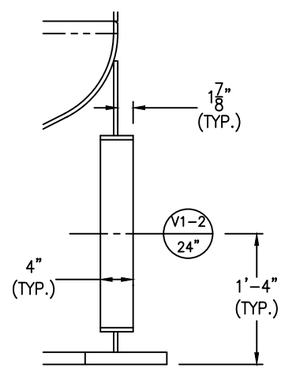

SKIRT OPENING V1 & V2 DETAIL

SCALE: 1" = 1'-0"

FC-38

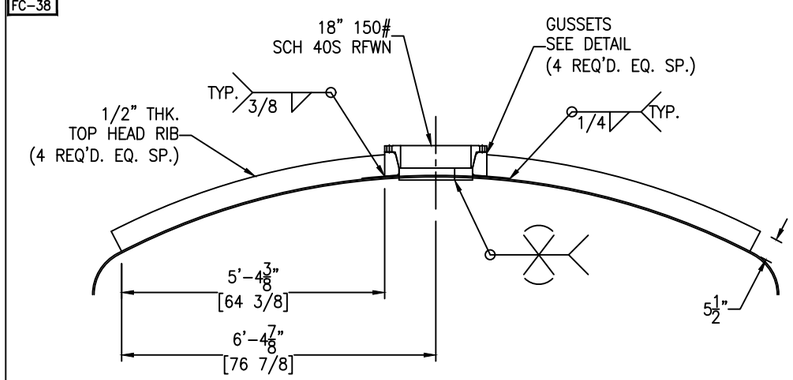

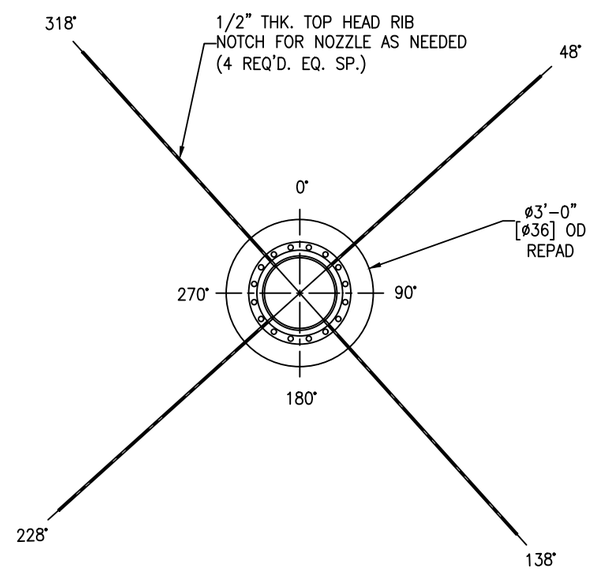

TOP HEAD RIB DETAIL

SCALE: 1/2" = 1'-0"

FC-38

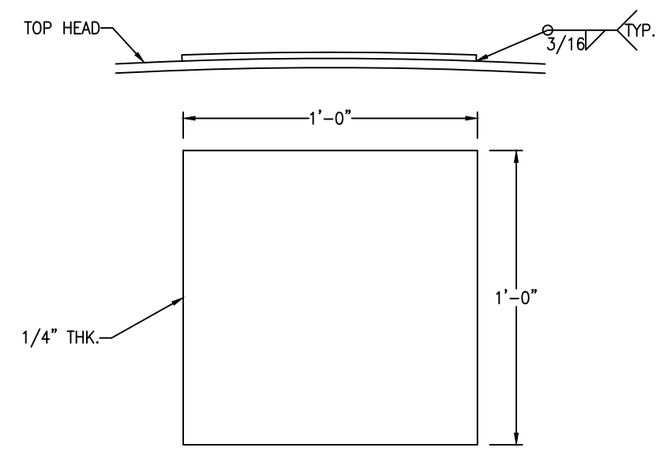

C.S. PAD DETAIL

(2 REQ'D) SCALE: 3" = 1'-0"

FC-38

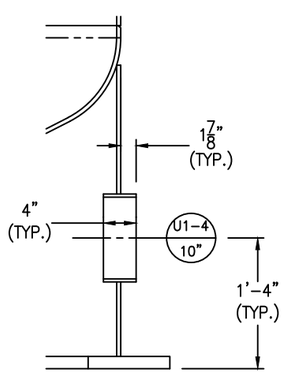

SKIRT OPENING U1,U2,U3 & U4 DETAIL

SCALE: 1" = 1'-0"

Bolting for blinds

G1, G2: (4+4) 1/2"-13 NC x 2 1/2" HH BOLT
(4+4) 1/2"-13 NC HH NUT
(1+1+1+1) 1 1/2" 150# RING GASKET x 1/8"

F, H: (4+4) 5/8"-11 NC x 2 1/2" HH BOLT
(4+4) 5/8"-11 NC HH NUT
(1+1+1+1) 2" 150# RING GASKET x 1/8"

T1, T2: (4+4) 1/2"-13 NC x 2" HH BOLT
(4+4) 1/2"-13 NC HH NUT
(1+1+1+1) 1" 150# RING GASKET x 1/8"

Q: (8) 5/8"-11 NC x 3" HH BOLT
(8) 5/8"-11 NC HH NUT
(1+1) 4" 150# RING GASKET x 1/8"

REV	D.BY	C.BY	DATE	DESCRIPTION
				AS BUILT
2	AD	–	10/28/24	CERTIFIED
1	AD	RS	10/17/24	APPROVAL REV 1
0	AD	RS	9/10/24	APPROVAL

⚠1 REVISIONS

Savannah Tank & Equipment Corp.
1517 Telfair Road, Savannah, GA 31415
(912) 233-8902

DRAWN BY: AD
CHK'D BY: RS
APPROVED BY: NP
SCALE: 1/4" = 1'-0"

GEOCYCLE LLC
40K GALLON TANK #3
EQUIP. #
CUST. PO #4501905971

DRAWING NO.: 053-24-4 | SHT 4 OF 8 | REV. SET 2

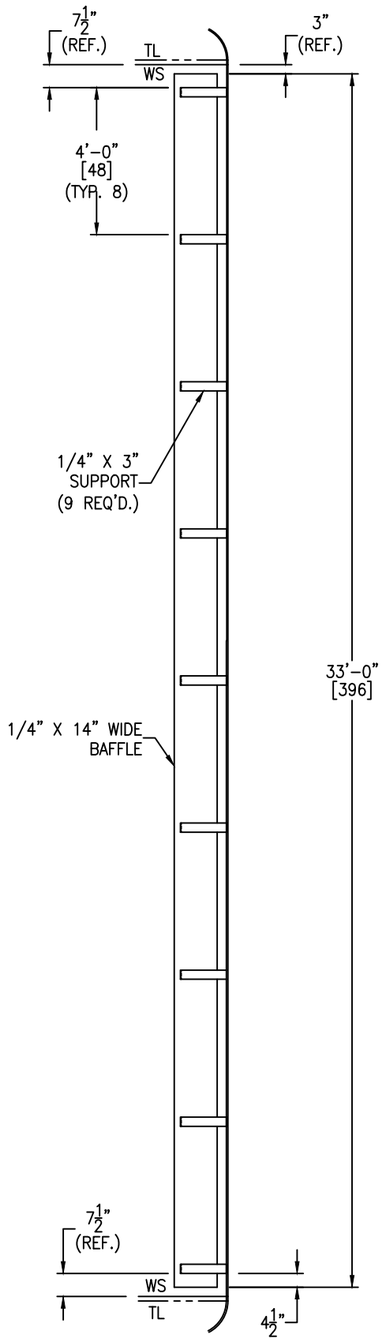

BAFFLE DETAIL

(4 REQ'D.) SCALE: 3/8" = 1'-0"

FC-38

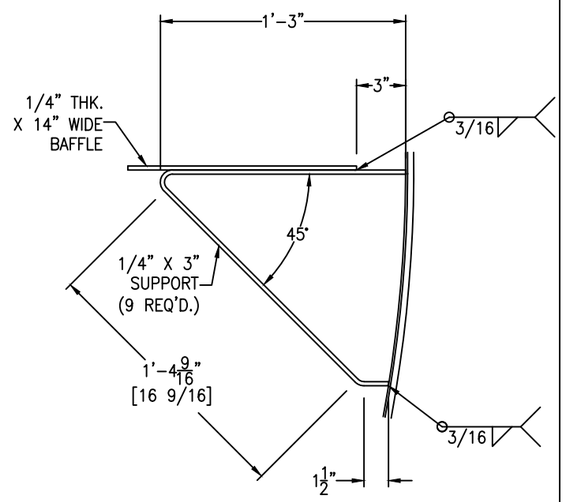

BAFFLE SUPPORT DETAIL

(4 REQ'D.) SCALE: 2" = 1'-0"

FC-38

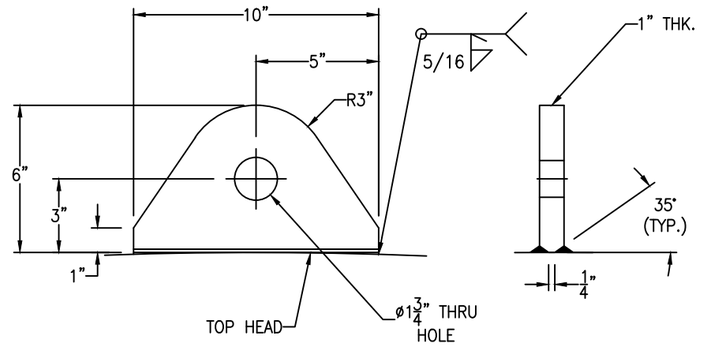

HEAD LIFT LUG DETAIL

(4 REQ'D) SCALE: 3" = 1'-0"

FC-38

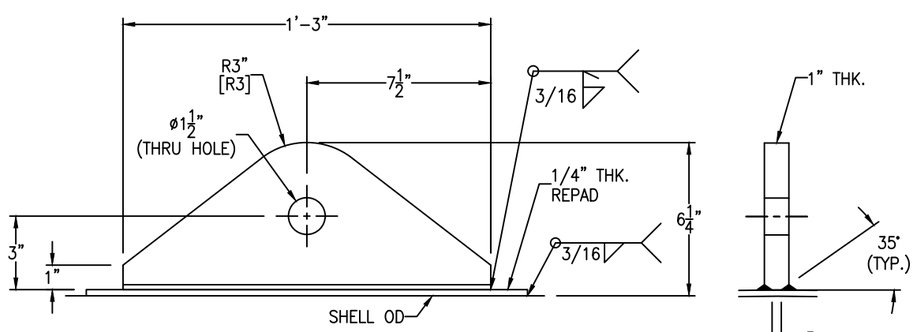

TAIL LUG DETAIL

(1 REQ'D) SCALE: 3" = 1'-0"

REV	D.BY	C.BY	DATE	DESCRIPTION
				AS BUILT
2	AD	–	10/28/24	CERTIFIED
1	AD	RS	10/17/24	APPROVAL REV 1
0	AD	RS	9/10/24	APPROVAL

⚠ REVISIONS

Savannah Tank & Equipment Corp.
1517 Telfair Road, Savannah, GA 31415
(912) 233-8902

DRAWN BY: AD
CHK'D BY: RS
APPROVED BY: NP
SCALE: 1/4" = 1'-0"

GEOCYCLE LLC
40K GALLON TANK #3
EQUIP. #
CUST. PO #4501905971

DRAWING NO.: 053-24-5 | SHT 5 OF 8 | REV. SET 2

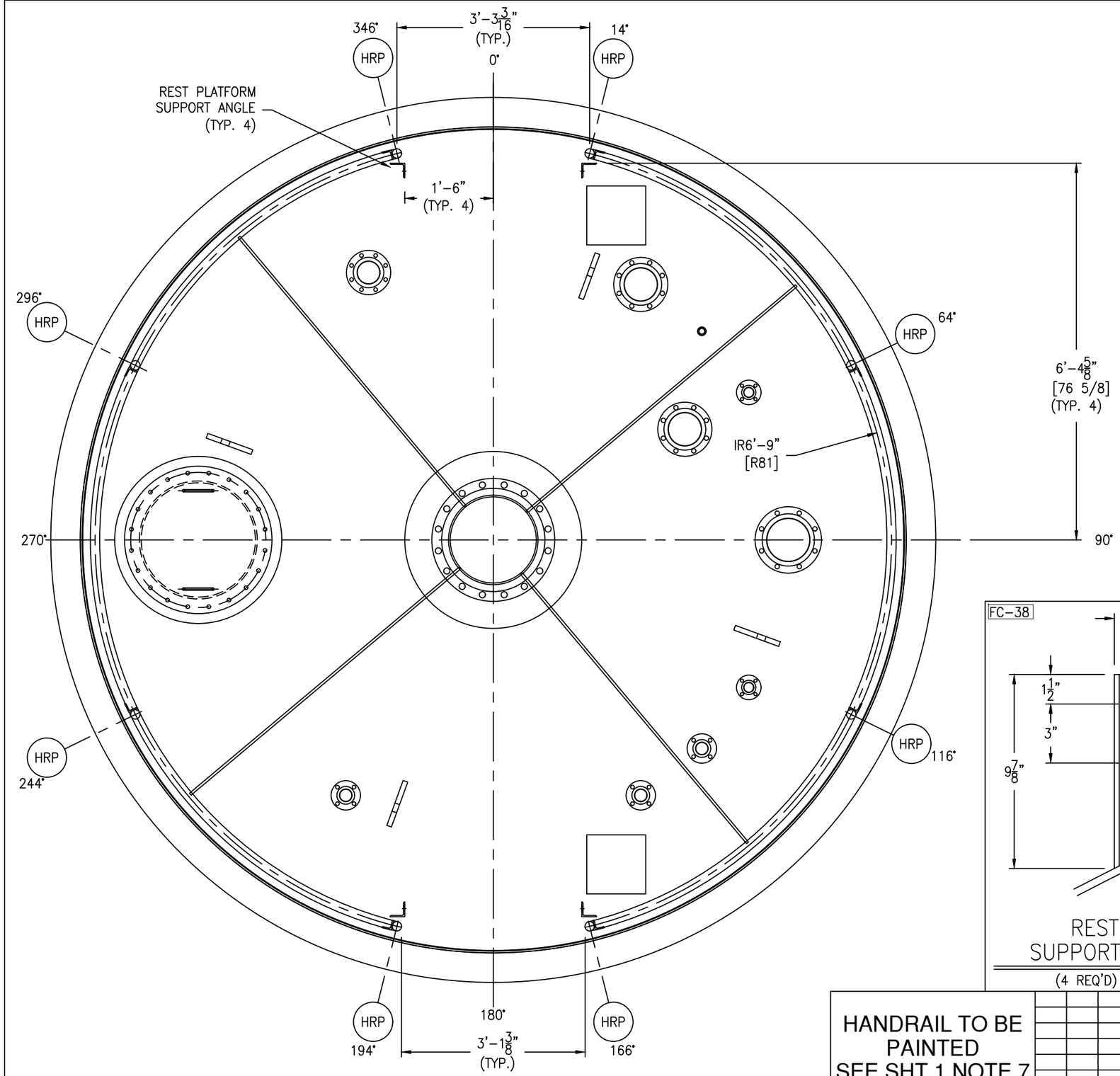

SCALE: 3/4" = 1'-0"

HANDRAIL BOLTING:
(16) 1/2-13 NC X 3" HH BOLT - SA193-B7 (ZINC PLATED)
(16) 1/2-13 NC HH NUT - SA194-2H (ZINC PLATED)

FC-38

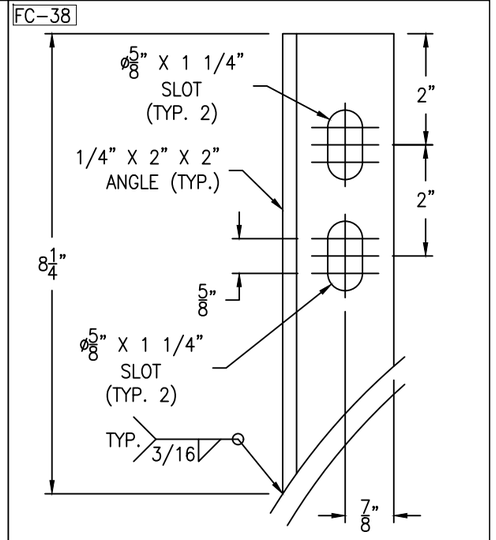

POST CLIP DETAIL

(8 REQ'D) SCALE: 6" = 1'-0"

FC-38

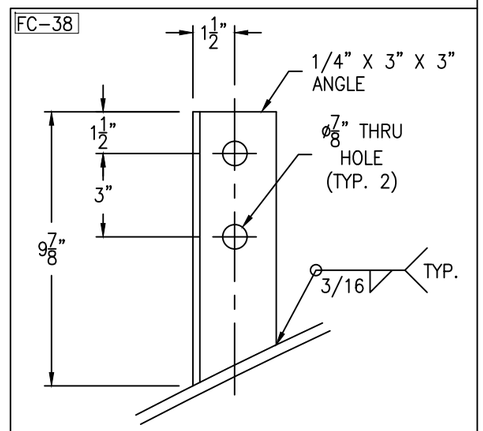

REST PLATFORM SUPPORT ANGLE DETAIL

(4 REQ'D) SCALE: 3" = 1'-0"

GM-73

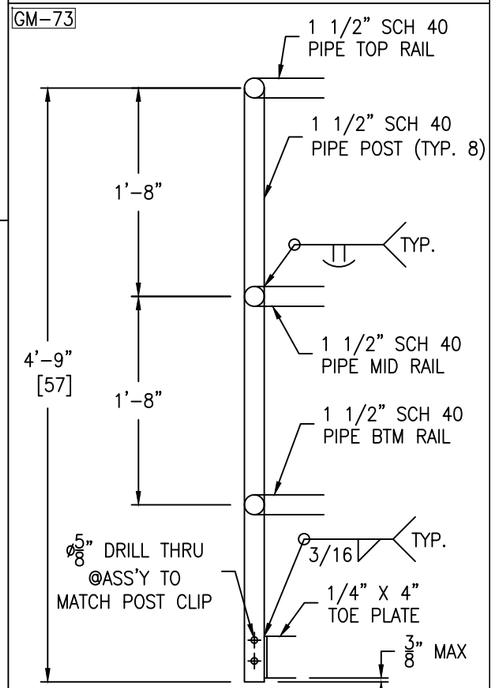

HANDRAIL DETAIL

(8 REQ'D) SCALE: 1 1/2" = 1'-0"

HANDRAIL TO BE PAINTED
SEE SHT 1 NOTE 7

REV	D.BY	C.BY	DATE	DESCRIPTION
				AS BUILT
2	AD	-	10/28/24	CERTIFIED
1	AD	RS	10/17/24	APPROVAL REV 1
0	AD	RS	9/10/24	APPROVAL

1 REVISIONS

Savannah Tank & Equipment Corp.
1517 Telfair Road, Savannah, GA 31415
(912) 233-8902

DRAWN BY: AD
CHK'D BY: RS
APPROVED BY: NP
SCALE: 3/8" = 1'-0"

GEOCYCLE LLC
40K GALLON TANK #3
EQUIP. #
CUST. PO #4501905971

DRAWING NO.: 053-24-6 SHT 6 OF 8 REV. SET 2

FC-38

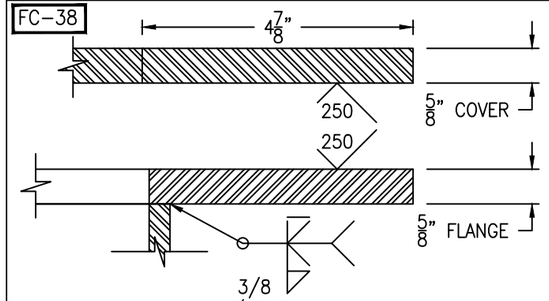

FLANGE/COVER DETAIL

(1 REQ'D) SCALE: 6" = 1'-0"

FC-38

Bolting for blind
(28) 3/4-10 NC x 2 1/2" HH BOLT
(28) 3/4-10 NC HH NUT
(1+3) 29 3/8" OD x 24" ID x 1/8" GASKET

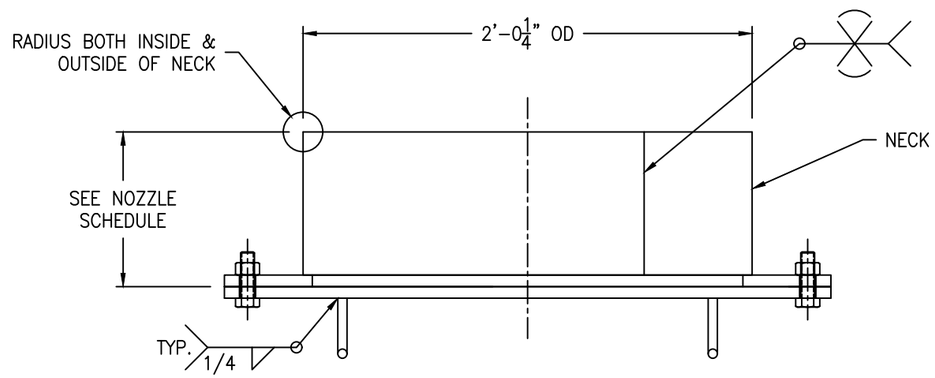

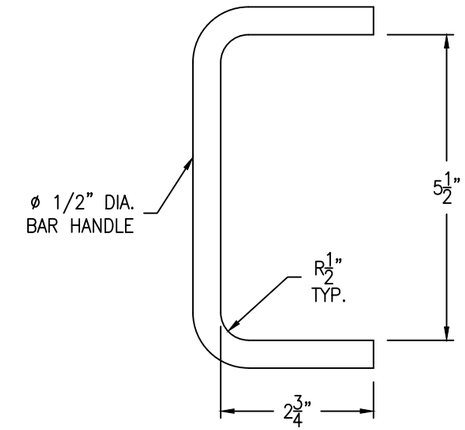

HANDLE DETAIL

(2 REQ'D) SCALE: 6" = 1'-0"

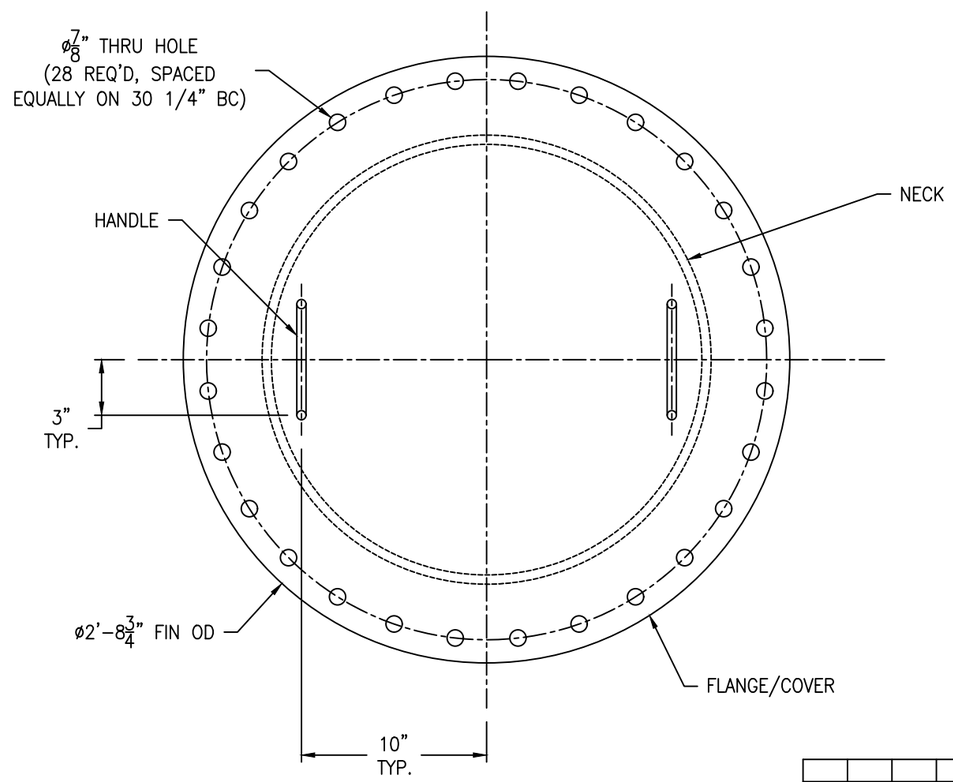

REV	D.BY	C.BY	DATE	DESCRIPTION
				AS BUILT
2	AD	–	10/28/24	CERTIFIED
1	AD	RS	10/17/24	APPROVAL REV 1
0	AD	RS	9/10/24	APPROVAL

1 REVISIONS

Savannah Tank & Equipment Corp.
1517 Telfair Road, Savannah, GA 31415
(912) 233-8902

DRAWN BY: AD
CHK'D BY: RS
APPROVED BY: NP
SCALE: 2" = 1'-0"

GEOCYCLE LLC
40K GALLON TANK #3
EQUIP. #
CUST. PO #4501905971

DRAWING NO.: 053-24-7 SHT 7 OF 8 REV. SET 2

FC-38

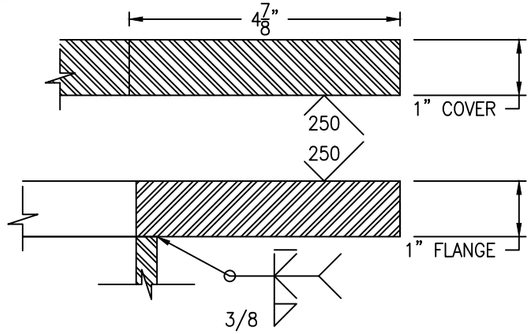

FLANGE/COVER DETAIL

(1 REQ'D) SCALE: 6" = 1'-0"

FC-38

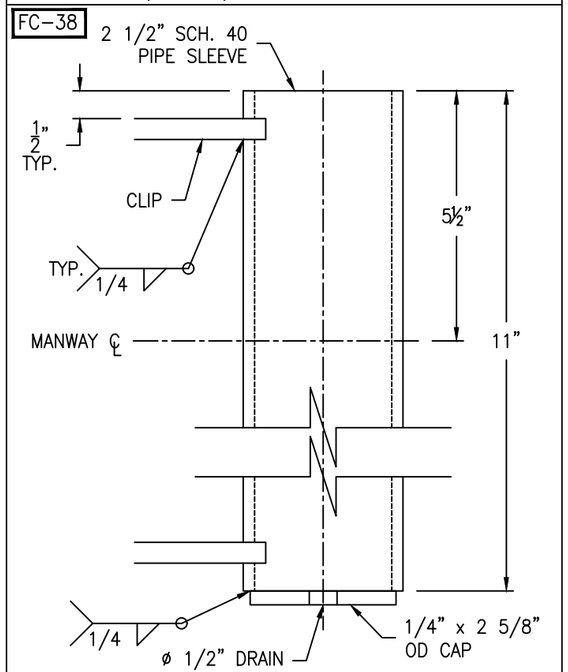

SLEEVE DETAIL

(1 REQ'D) SCALE: 6" = 1'-0"

FC-38

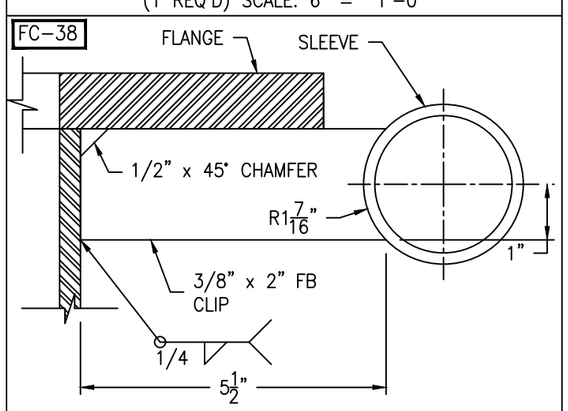

CLIP DETAIL

(2 REQ'D) SCALE: 6" = 1'-0"

FC-38

Bolting for blind
(42) 3/4-10 NC x 3 1/4" HH BOLT
(42) 3/4-10 NC HH NUT
(1+3) 41 3/8" OD x 36" ID x 1/8" GASKET

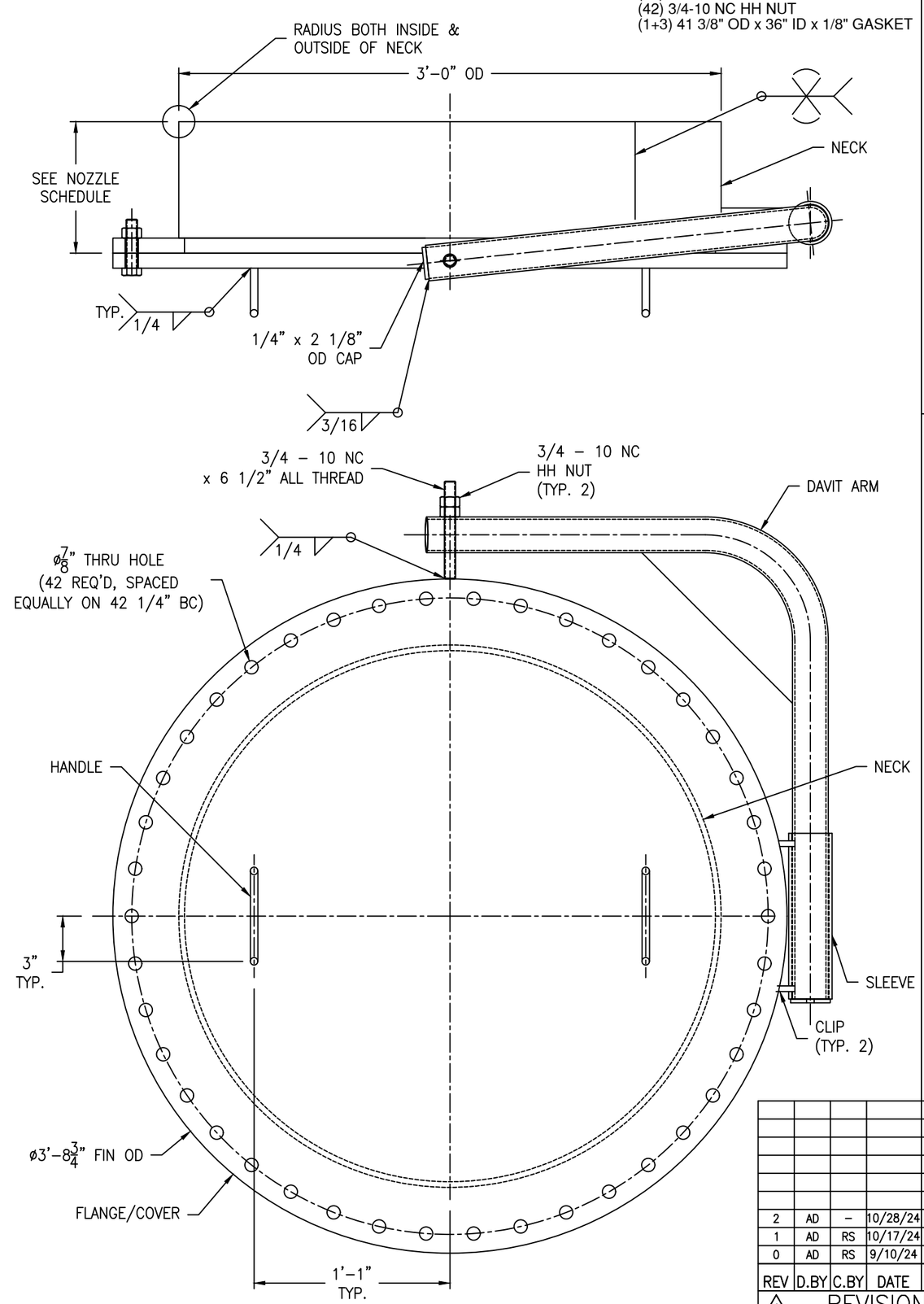

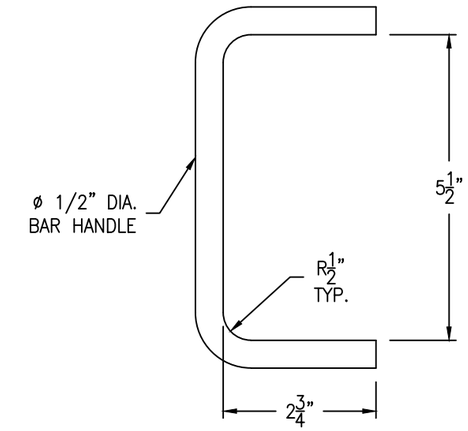

HANDLE DETAIL

(2 REQ'D) SCALE: 6" = 1'-0"

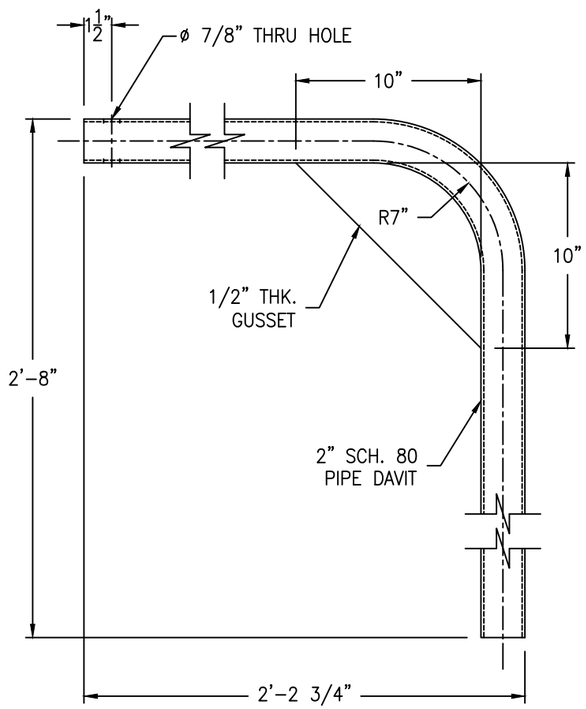

DAVIT ARM DETAIL

(1 REQ'D) SCALE: 2" = 1'-0"

REV	D.BY	C.BY	DATE	DESCRIPTION
				AS BUILT
2	AD	–	10/28/24	CERTIFIED
1	AD	RS	10/17/24	APPROVAL REV 1
0	AD	RS	9/10/24	APPROVAL

⚠ REVISIONS

Savannah Tank & Equipment Corp.
1517 Telfair Road, Savannah, GA 31415
(912) 233-8902

DRAWN BY: AD
CHK'D BY: RS
APPROVED BY: NP
SCALE: 2" = 1'-0"

GEOCYCLE LLC
40K GALLON TANK #3
EQUIP. #
CUST. PO #4501905971

DRAWING NO.: 053-24-8 SHT 8 OF 8 REV. SET 2